acoufelt



PopUp
Wall Tiles

Premier Collection

Enhance any space with visual intrigue and effective sound control using sculptural, lightweight PopUp Wall Tiles. Designed for creative flexibility, PopUp Tiles are perfect for both large and small spaces—cover expansive areas for maximum sound absorption or craft smaller installations to add visual interest to empty walls. Combining bold aesthetics with significant acoustic performance, PopUp Tiles are the ideal solution for acoustically challenging environments.

Specifications

Surface	Wall
Material	FilaSorb™ polyester felt
Weight	12mm, 2400gsm
Standard Sizes	Width:100, 300mm W Height: 300, 1220mm H Depth: 50, 75mm D



PopUp Wall Tiles with Slant Pattern with in Kale and Thistle



PopUp Wall Tiles with Roof Pattern in Denim and Peacock

Technical

NRC Rating	Pending product testing
Fire Test	Test Results Pending
Water Sorption	ASTM C1104-2019 (A Modified) Water sorbed by weight: 0.20% (based on a 12mm thick panel)
Colorfastness	ISO 105-B02, 6-7

Details

Lead Time	Refer to Product Lead Time Matrix
Origin	Australia
Warranty	Product: 20 years* Colorfastness: 20 years*

** Conditions apply*

Environmental

Recycled Content	Minimum 60%
Energy	Generated using 40% solar energy
Indoor Air Quality	VOC less than/equal to 0.5mg/m3
Recyclable	100%*
Certifications	Declare Certification - LBC Red List Free (third-party verified) SCS Global Indoor Advantage Gold

© 2026 Acoufelt. All rights reserved.

Colorways

White
WH12


Milkyway
MI74


Ivory
IV11

Pearl
PE21


Valentine
VA70


Quartz
QU67


Stonewash
ST72


Sea Salt
SE57


Platinum
PL04


Almond
AL55


Pistachio
PI25


Turmeric
TU60


Flamingo
FL61


Amethyst
AM69


Periwinkle
PE23


Peacock
PE20


Metal
ME03


Mushroom
MU75


Celery
CE65


Wheat
WH68


Peach
PE19


Lilac
LI13


Marine
MA15


Sencha
SE58


Grey
GR02


Umber
UM54


Wasabi
WA29


Popcorn
PO26


Currant
CU59


Berry
BE06


Azure
AZ05


Oregano
OR18


Charcoal
CH01


Walnut
WA56


Eucalyptus
EU71


Carrot
CA08


Loganberry
LO77

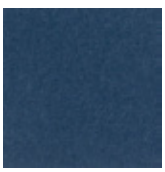
Granite
GR62


Denim
DE09

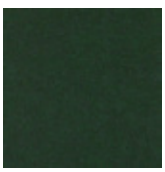
Kale
KA12

Piano Black
PI24

Slate
SL27

Nori
NO76

Peppercorn
PE22

Shiraz
SH63

Flint
FL64

Midnight
MI16

© 2026 Acoufelt. All rights reserved.

Sizes

Standard Sizes Width: 100, 300mm W
Height: 300, 1220mm H
Depth: 50, 75mm D

Plan

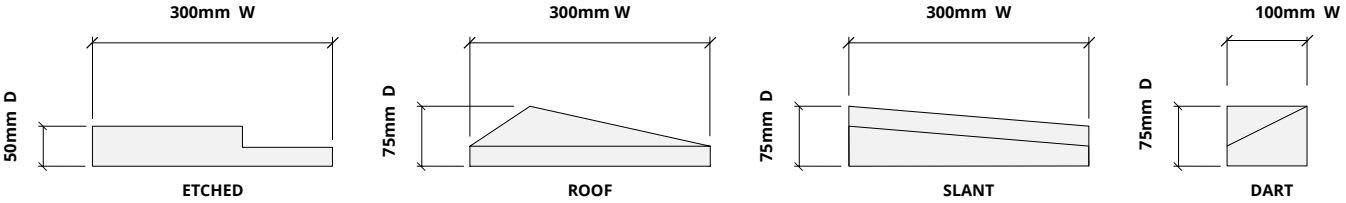

Elevations

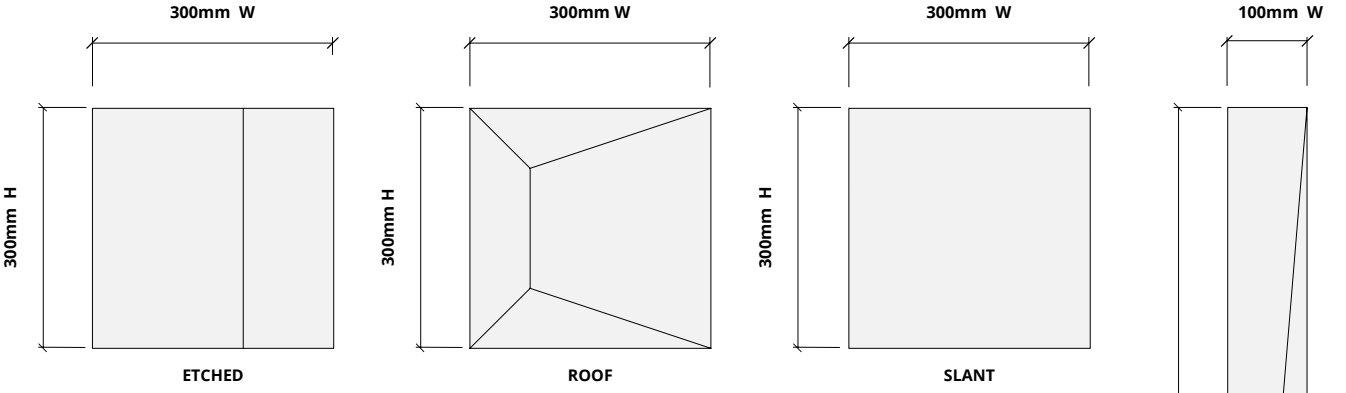

Perspectives

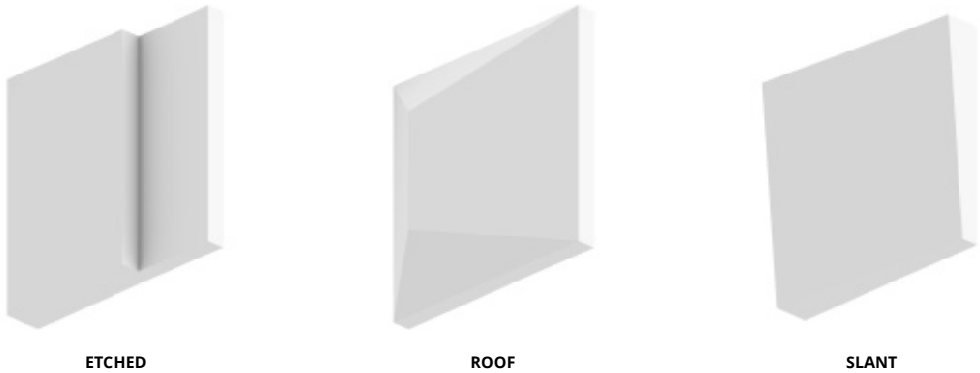

© 2026 Acoufelt. All rights reserved.

How to Specify

1. Choose Tile Pattern **2. Choose Colorway**

Select desired panel pattern and size.

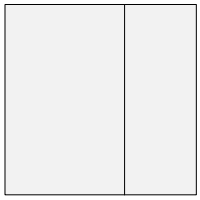

ETCHED

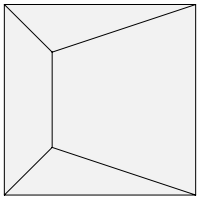

ROOF

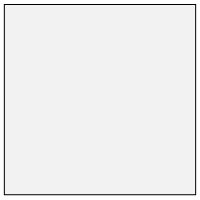

SLANT



DART

---

1. Choose Tile Pattern **2. Choose Colorway**

Select colorways on page 3.

© 2026 Acoufelt. All rights reserved.

Mounting Methods

Construction adhesive

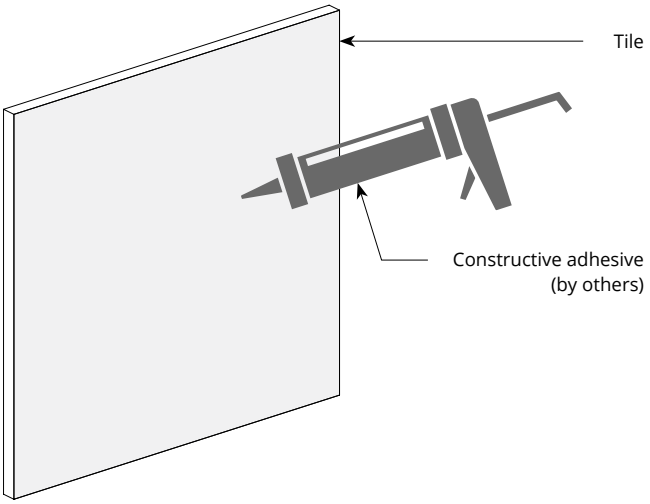

© 2026 Acoufelt. All rights reserved.

Acoustic Performance

Test Method	ISO 354-2006
Install Method	Type A
Mounting Method	No air gap
Rating Method	ISO 11654-1997
Test Results	Pending product testing

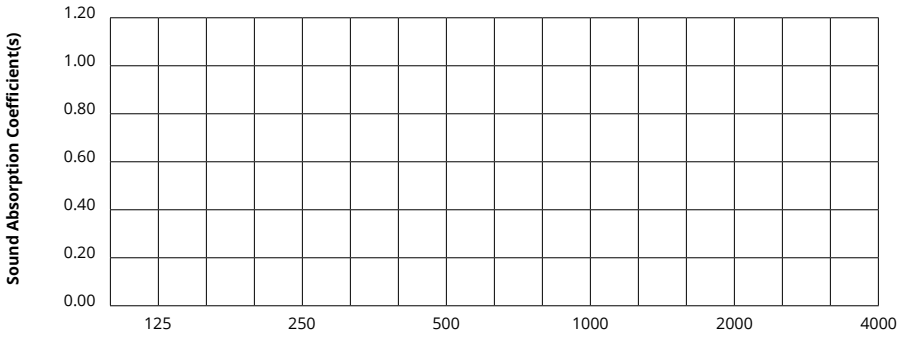

Frequency f (Hz)	125	250	500	1000	2000	4000	NRC
12mm	Pending product testing						

What is a Noise Reduction Coefficient (NRC)?

You'll find the NRC rating in the specifications of all of our products. This acronym stands for Noise Reduction Coefficient, and is expressed as a single number, a rating that describes the degree to which acoustic products can absorb sound.

You can use NRC values to understand the overall performance of our acoustic wall and ceiling products. The higher the NRC, the better the product is at soaking up the sound.

Performance Indices: Noise Reduction Coefficient (NRC) results represent the absorption coefficients measured at the one third octave bands at 125, 250, 500, 1000, 2000 and 4000 Hz rounded to the nearest 0.05. Acoustic testing has been performed according to the methods mentioned above. Customization of installation of the product could alter the results. Sound Absorption Average (SAA) indicates the absorption coefficient average for the twelve one-third octave bands ranging between 200 and 2500 Hz.

© 2026 Acoufelt. All rights reserved.