acoufelt

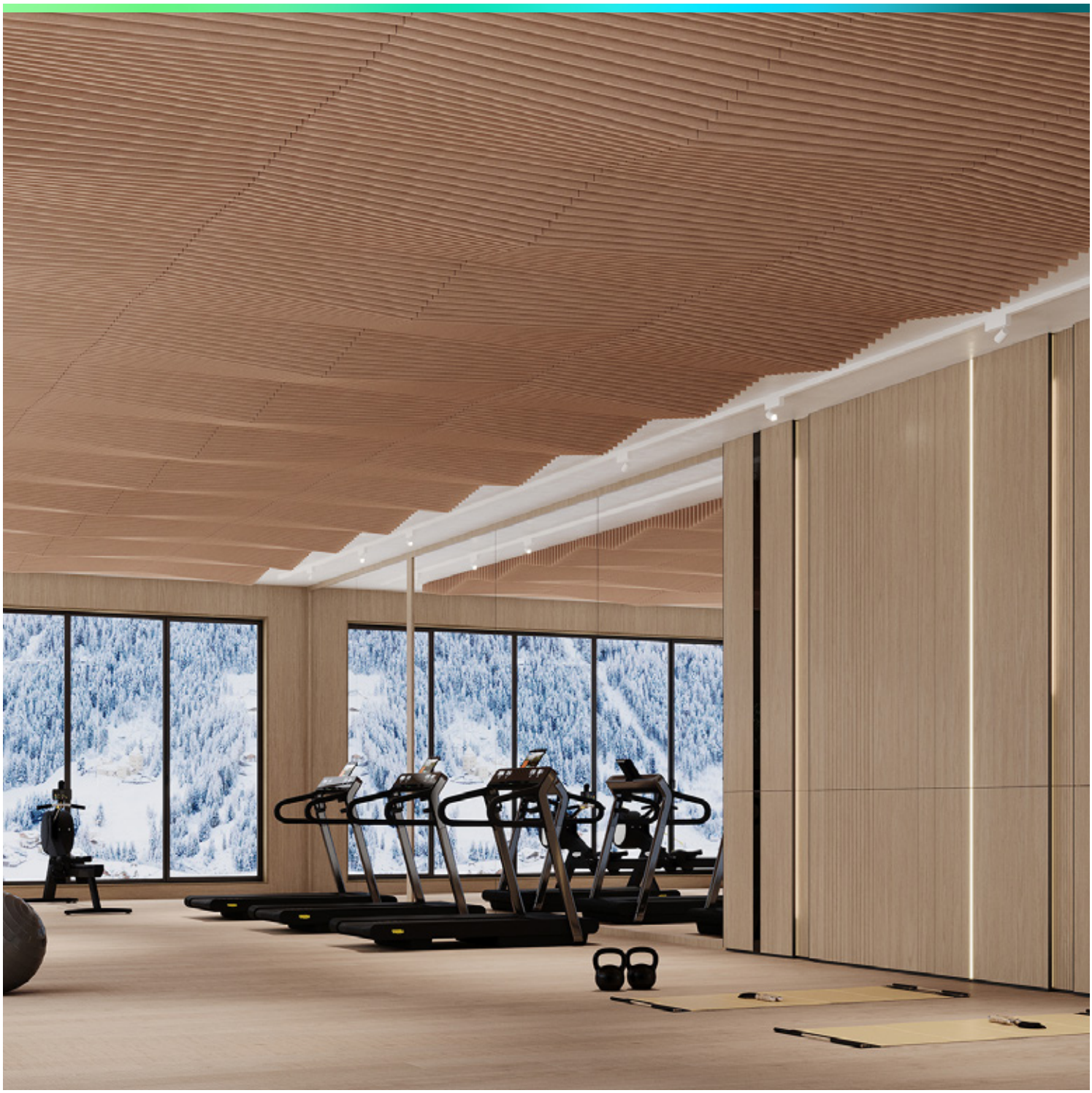

Rail, Lines

Ceiling Frames

Premier Collection

Rail Ceiling Frames offer unmatched flexibility to craft unique, textured ceilings. With an open-tile design and the absence of a backer, Rail seamlessly integrates with essential ceiling components like lighting, sprinklers, and speakers.

The Rail frames system ensures hassle-free installation with its innovative click-in design, eliminating the need for additional hardware. Fully compatible with standard 24mm T-grid drop ceilings, it provides a versatile and efficient solution for modern ceiling designs.

Specifications

Surface	Ceiling	
Material	FilaSorb™ polyester felt	
Weight	2400gsm 4800gsm	
Standard Sizes	600mm W x 600mm L x 100mm H 600mm W x 600mm L x 150mm H 600mm W x 1200mm L x 100mm H 600mm W x 1200mm L x 150mm H	
Compatible T-grid	**Type**	**Layout**
	25mm Flat	Standard 600mm x 600mm
	14mm Flat	Standard 600mm x 600mm

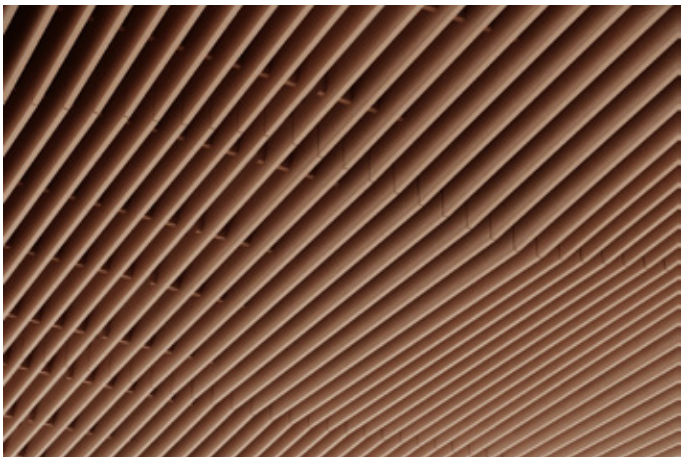

Rail, Lines Ceiling Frames in Quartz

Technical

NRC Rating	Pending product testing
Fire Test	Test Results Pending
Water Sorption	ASTM C1104-2019 (A Modified) Water sorbed by weight: 0.20% (based on a 12mm thick panel)
Colorfastness	ISO 105-B02, 6-7

Details

Lead Time	Refer to Product Lead Time Matrix
Origin	Australia
Warranty	Product: 20 years* Colorfastness: 20 years*

** Conditions apply*

Environmental

Recycled Content	Minimum 60%
Energy	Generated using 40% solar energy
Indoor Air Quality	VOC less than/equal to 0.5mg/m3
Recyclable	100%*
Certifications	Declare Certification - LBC Red List Free third-party verified) SCS Global Indoor Advantage Gold

** PET is recyclable through participating partners*

© 2026 Acoufelt. All rights reserved.

Colorways

White
WH12

Milkyway
MI74

Ivory
IV11

Pearl
PE21

Valentine
VA70

Quartz
QU67

Stonewash
ST72

Sea Salt
SE57

Platinum
PL04

Almond
AL55

Pistachio
PI25

Turmeric
TU60

Flamingo
FL61

Amethyst
AM69

Periwinkle
PE23

Peacock
PE20

Metal
ME03

Mushroom
MU75

Celery
CE65

Wheat
WH68

Peach
PE19

Lilac
LI13

Marine
MA15

Sencha
SE58

Grey
GR02

Umber
UM54

Wasabi
WA29

Popcorn
PO26

Currant
CU59

Berry
BE06

Azure
AZ05

Oregano
OR18

Charcoal
CH01

Walnut
WA56

Eucalyptus
EU71

Carrot
CA08

Loganberry
LO77

Granite
GR62

Denim
DE09

Kale
KA12

Piano Black
PI24

Slate
SL27

Nori
NO76

Peppercorn
PE22

Shiraz
SH63

Flint
FL64

Midnight
MI16

For questions or additional product information,
visit acoufelt.com.au or call 1800 626 462

© 2026 Acoufelt. All rights reserved.

How to Specify

1. Choose Slat Height | 2. Choose Tile Size | 3. Choose Colorway

Slats are available in two overall heights:

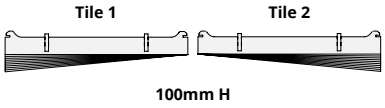

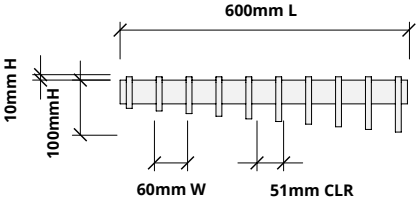

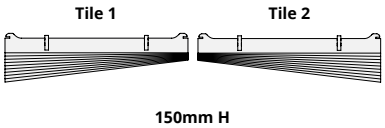

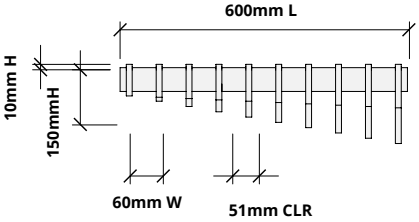

1. Choose Slat Height | **2. Choose Tile Size** | 3. Choose Colorway

Ties are available in two sizes for use with 100mm H and 150mm H slats.

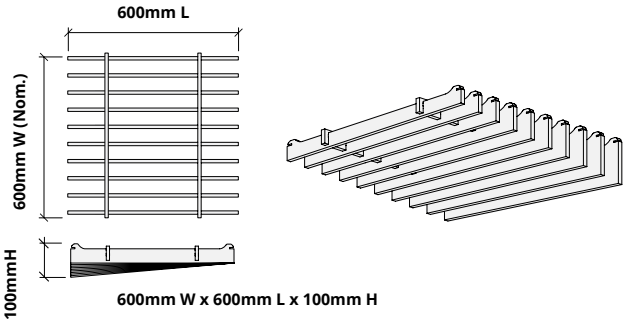

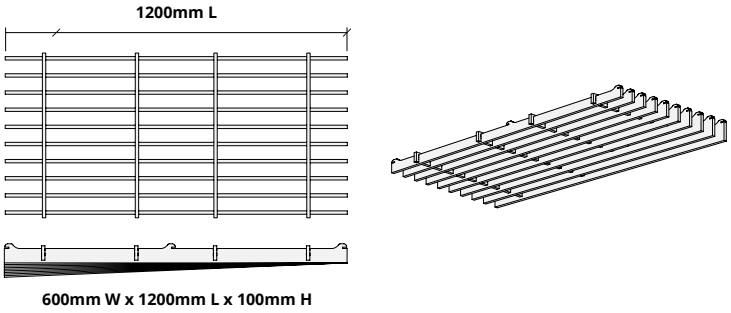

1. Choose Slat Height | 2. Choose Tile Size | **3. Choose Colorway**

Select one colorway for your tile. See colorway choices on page 3.

© 2026 Acoufelt. All rights reserved.

Acoustic Performance

Test Method	ASTM E795
Install Method	E-400
Rating Method	ASTM C423-17
Mounting Method	
Test Results	Pending product testing

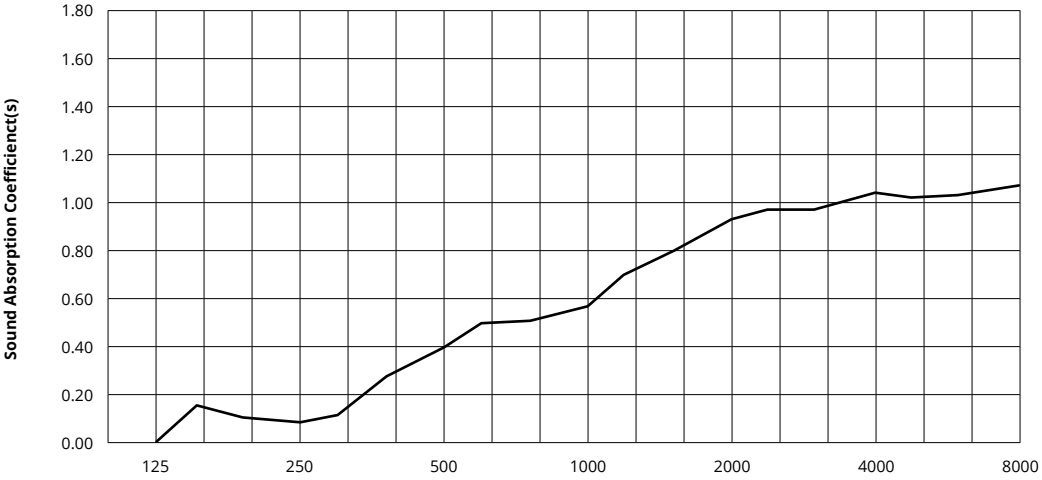

Frequency f (Hz)	125	250	500	1000	2000	4000	8000	NRC
12mm	Pending product testing							

What is a Noise Reduction Coefficient (NRC)?

You'll find the NRC rating in the specifications of all of our products. This acronym stands for Noise Reduction Coefficient, and is expressed as a single number, a rating that describes the degree to which acoustic products can absorb sound.

You can use NRC values to understand the overall performance of our acoustic wall and ceiling products. The higher the NRC, the better the product is at soaking up the sound.

Performance Indices: Noise Reduction Coefficient (NRC) results represent the absorption coefficients measured at the one third octave bands at 125, 250, 500, 1000, 2000 and 4000 Hz rounded to the nearest 0.05. Acoustic testing has been performed according to the methods mentioned above. Customization of installation of the product could alter the results. Sound Absorption Average (SAA) indicates the absorption coefficient average for the twelve one-third octave bands ranging between 200 and 2500 Hz.

For questions or additional product information,
visit acoufelt.com.au or call 1800 626 462

© 2026 Acoufelt. All rights reserved.